BIO 204 : BIOLOGICAL TECHNIQUES

- Course content
- Microscopy
- Preparation of microscope slides
- Photometry
- Colorimetry.
- Chromatography
- Conductometry
- Experimental design
- Electrophoretic techniques
- Centrifugation
- Techniques in detecting contaminants in stored commodities.

JOMO

- Practical Periods :8a.m-11a.m on Wednesdays Venue: BIO Lab 2
- Lecture Periods :8a.m-10a.m on Wednesdays.
- Practical Period: 3-6pm on Fridays
- Venue: Biology Laboratory 2
- Course Lecturers:
- **Mr. O. J. Afolabi.**
- Mr Sorungbe
- Mr. S. E. Abiya
- Dr Alabi
- Dr. Gbaye
- Dr(Mrs) Aborishade

MODULE 1: MICROSCOPY

- Introduction

- **Microscopy** is the technical field of using microscopes to view samples and objects that cannot be seen with the unaided eye (objects that are not within the resolution range of the normal eye).

- Microscope is coined from two Greek words: Mikros (small) and skopen (to look or see). Therefore, a microscope is defined as an instrument used to see objects that are too small for the naked eye.

- The word microscopic means invisible to the eye unless aided by a microscope.

- All microscopes consist of a coordinated system of lenses arranged so that a magnified image of a specimen is seen by the viewer.

- Clarity in microscope is determined by the following parameters:

1. **Magnification**: Is the degree of enlargement of the image of the object compared to its real size. It is provided by a two lens system; ocular lens (8 or 10X) and objective lens (4, 10, 40 or 100X). Total magnification is the product of these two magnifying power values.

2. **Resolution** is a measure of the clarity of an image. Resolution is the ability of the lens of a microscope to distinguish/separate between two points that are closed together. The better the resolution, the sharper the image.

- Resolution is affected by lens design and inversely related to the wavelength of radiation used.

- **Resolving power** is the ability of an optical instrument to show two close objects as separate. For example, what looks to your unaided eye like a single star in the sky may be resolved as two stars with the help of a telescope. Any optical device is limited by its resolving power.

3. **Contrast**, is the ability to determine particular detail of specimen against its background. Contrast is the **difference in intensity** perceived between different parts of an image.

- In a bright field light microscope, adjustable **condenser** with aperture diaphragm control or **adding dyes** may increase contrast of a transparent specimen.

- Contrast can be enhanced by:
- the use of stains and
- adjusting microscope settings, usually at the expense of resolution.

Magnification Versus Resolution

- The function of any microscope is to enhance *resolution.*
- *At the same time microscope is* used to create an enlarged view of an object so that we can observe details not otherwise possible with the human eye.
- Because of the enlargement, resolution is often confused with *magnification, which refers to the size of an image.*
- *In* general, the greater the magnification, the greater the resolution, but this is not always true

Demonstration of Magnification & Resolution

- ex

JOMO

- The reason for a dichotomy between magnification and resolution is the ability of the human eye to see 2 objects.
- It is necessary that 2 objects be about 0.1-mm apart when held 10" from the face in order for us to detect them as 2 objects. If they are closer than 0.1 mm, we will perceive them as a single object.
- If the 2 objects are 0.01-mm apart, we cannot detect them unless we magnify the image by 10X.
- What has happened is that we have effectively altered our resolution ability from 0.1 mm to 0.01 mm through the use of a magnifying lens.
- Our limit of resolution has changed from 0.1 mm to 0.01 mm, or inversely, our resolving power (resolution) has increased by a factor of 10.

Microscope Resolution

- Microscope resolution is described mathematically by an equation developed in the 1870s by Ernst Abbe, a German physicist and microscopist.
- The Abbe equation states that the minimal distance(d) between two objects that reveals them as separate entities depends on the wavelength (λ) used to illuminate the specimen and on the numerical aperture of the lens ($n\sin\theta$).
- Numerical aperture of the lens is the ability of the lens to gather light.
- $d = \frac{0.5\,\lambda}{}$

- $d = \frac{0.5\lambda}{n\sin\theta}$ or $\frac{0.5\lambda}{NA}$
- Where λ is the wavelength
- n is the refractive index of medium (air) in which the lens works and
- Θ is ½ the angle of the cone of light entering an objective.
- As d becomes smaller the resolution increases, and image becomes clearer.
- d becomes smaller as the wavelength of light used decreases and numerical aperture (NA) increases..

Wavelength Light Spectrum

UV lights	Violet	Blue	Green	Yellow	Orange	Red	Infra-Red
200-400nm	400-450nm	450-500nm	500-550nm	550-600nm	600-650 nm	650-750nm	750-900nm

Properties of Microscope Objectives

Property	Scanning	Low power	High power	Oil Immersion
Magnification	4X	10X	40-45X	90-100X
Numerical Aperture	0.10	0.25	0.55-0.65	1.25-1.4
Focal Length (F)	40mm	16mm	4mm	1.8-2.0mm
Working distance	17-20mm	4-8mm	0.5-0.7mm	0.1mm
Resolving power with blue light (450nm)	2.3µm	0.9µm	0.35µm	0.18µm

Parts of a binocular microscope

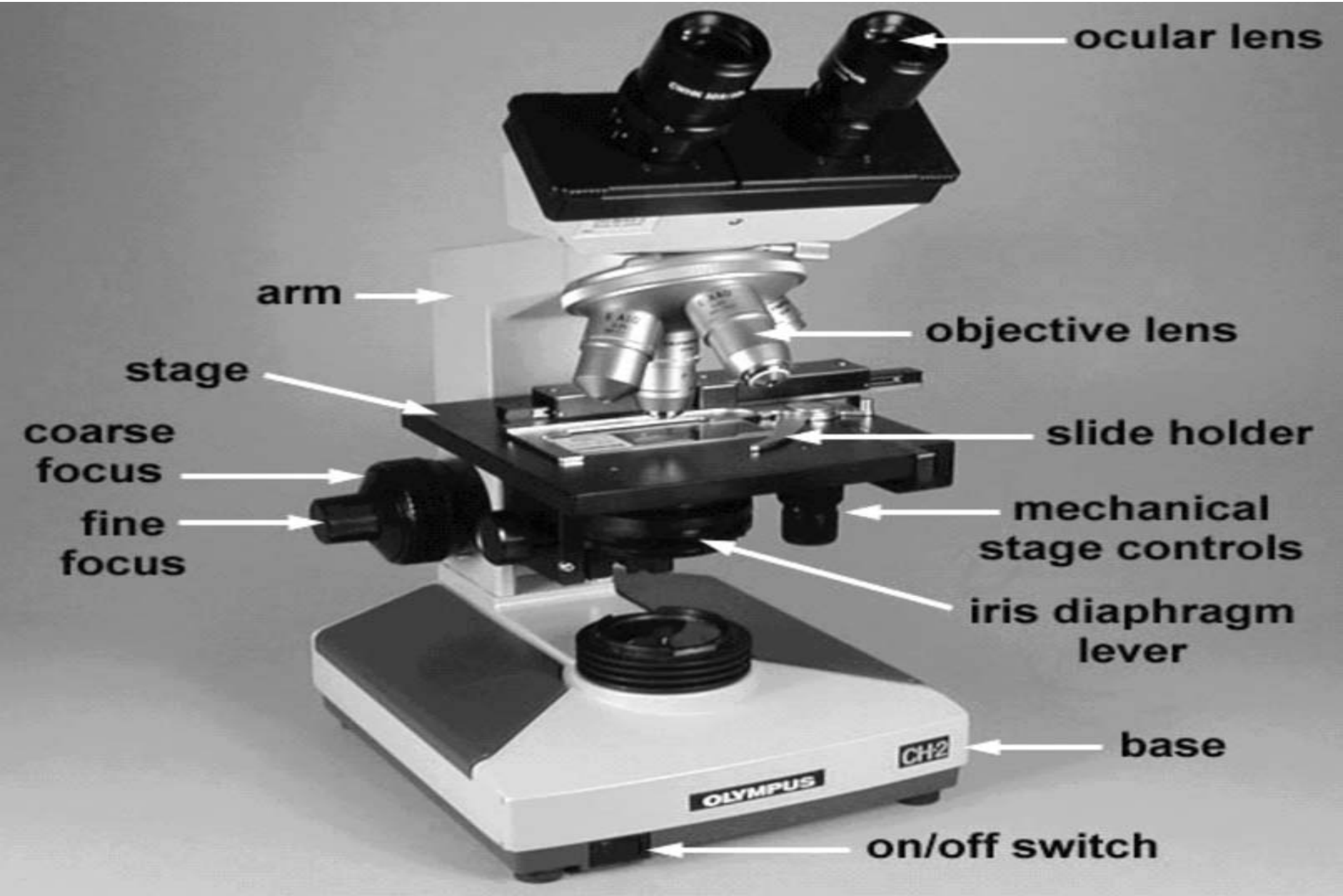

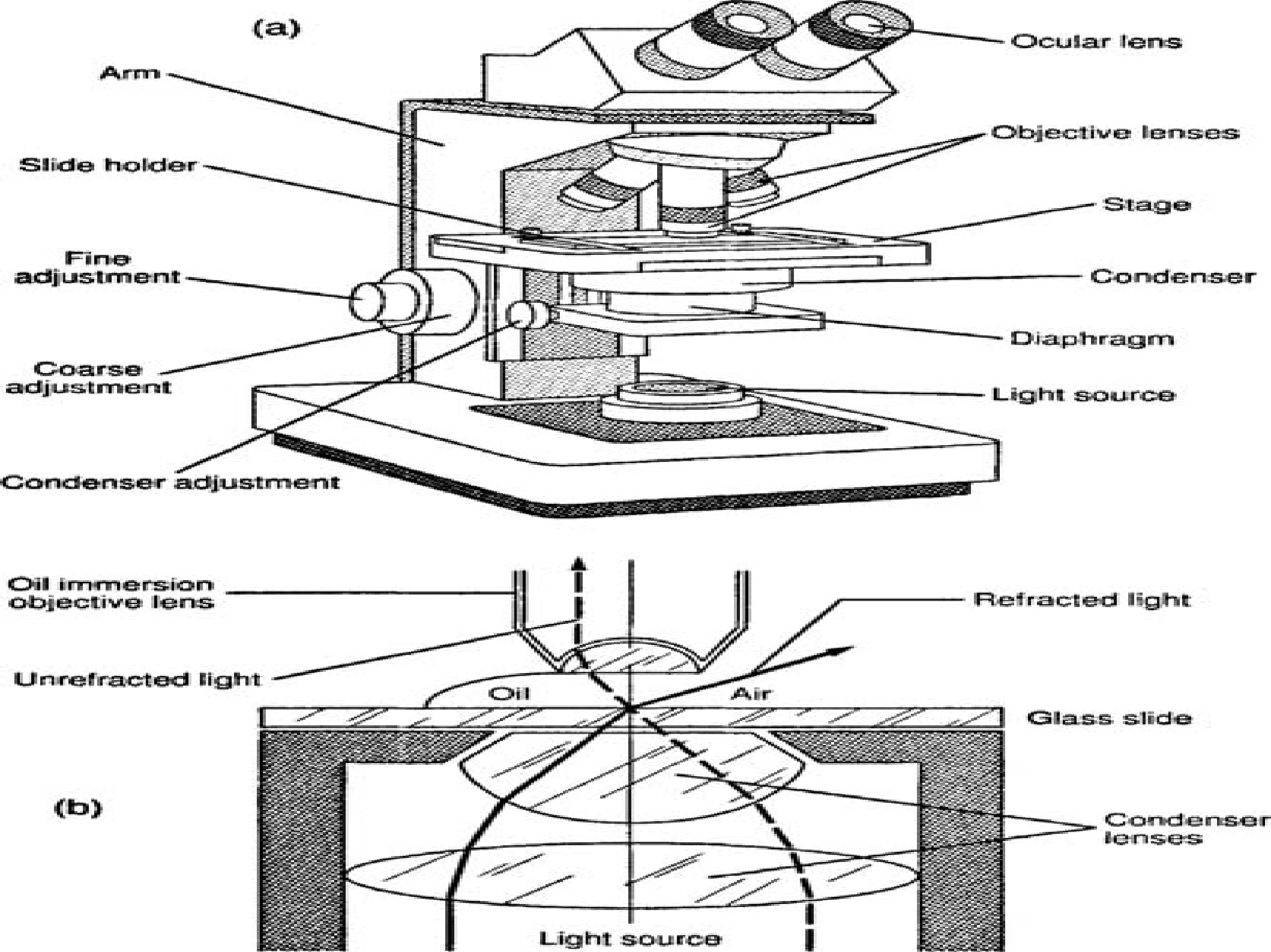
(a)
Ocular lens
Arm
Objective lenses
Slide holder
Stage
Fine adjustment
Condenser
Diaphragm
Coarse adjustment
Light source
Condenser adjustment
Oil immersion objective lens
Refracted light
Unrefracted light
Oil
Air
Glass slide
(b)
Condenser lenses
Light source

Parts of a monocular microscope

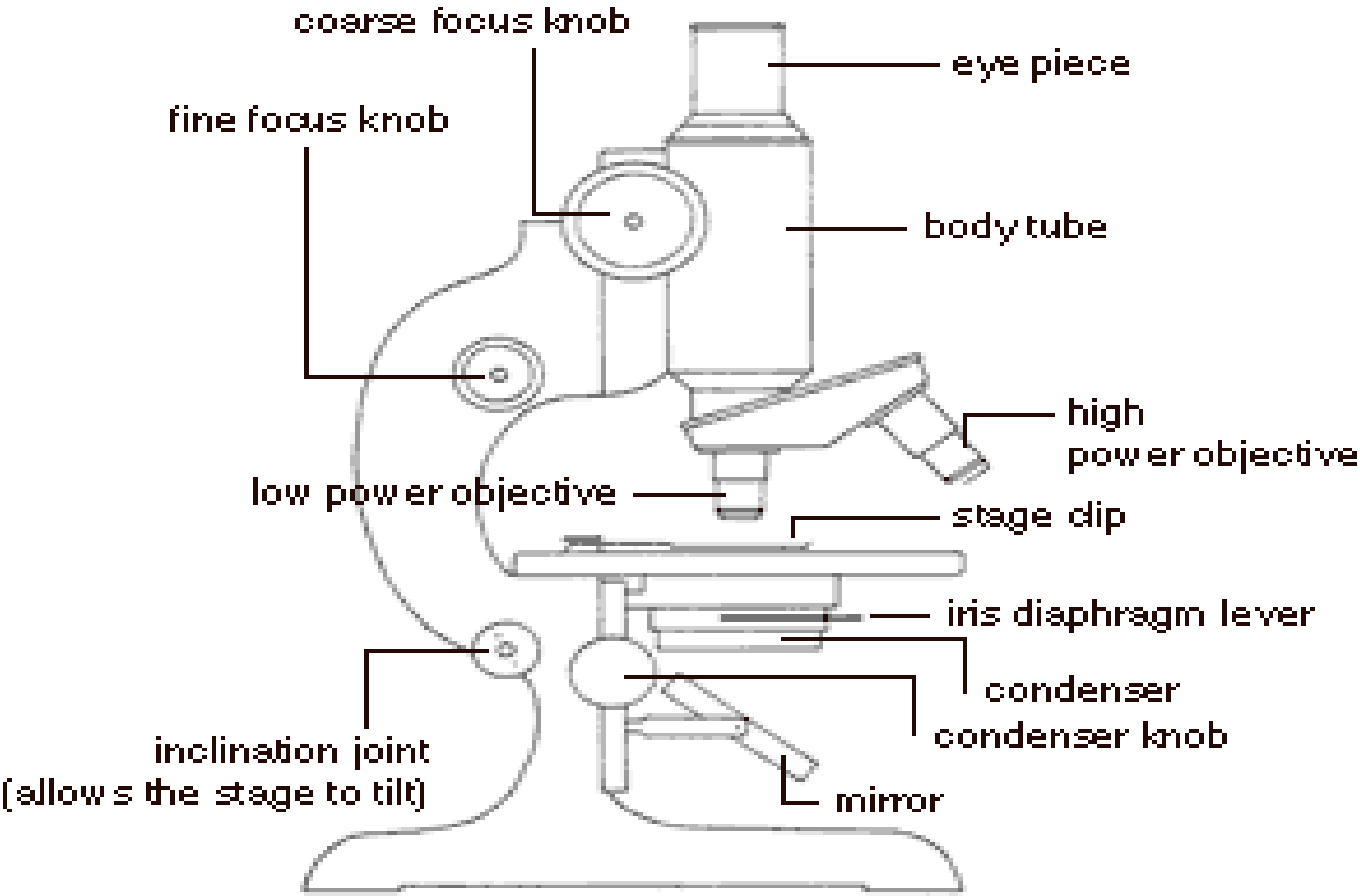

Basic Features of a Typical Light Microscope

- A typical light microscope consists of the following parts:
- **Base or foot**: This provides stability for the microscope.
- **The limb**: It is connected to the base by means of hinged joint and carries the remainder of the microscope components.
- **Body tube**: This is connected to the upper end of the limb of rack and pinion mechanism (coarse adjustment) which moves the body tube up and down a slide . It also contains fine adjustment knob for getting a sharp image of the specimen

- **Revolving nosepiece**: This is attached to the bottom of the tube and may carry three or more objectives, each of which "clicks" into position.
- **Draw tube** : This is extension tube , which slides in the upper end of the body tube and carries the eyepiece.
- **Coarse adjustment knob**: This is a rack and pinion mechanism, forward rotation lowers and backward rotation raises the body tube. Focusing should always be done by lowering the head to the level of the stage, approaching the objective to the cover glass, then looking through the eyepiece and focusing upwards.

- **Fine adjustment knob**: This is used to get sharp image of the specimen.
- **Stage/ Mechanical stage**: This is connected to the lower end of the limb and may rotate and have scale graduated in degrees. This is a platform where the microscope slide is placed.
- **Source of illumination** (bulb or mirrors): The limb also carries the mirror mount, and a double mirror, plane on one side, concave on the other side. The plane mirror is better for low powers and concave mirror for high power.
- **Condenser**: Helps to focus or concentrates the light source on the specimen. It also eliminates stray/scattered light and provides uniform illumination.
- Iris diaphragm: This controls the amount of light reaching the specimen.

Types of Microscopy

- The three forms of microscopy are:

1. Light microscopy/Optical Microscopy.
2. Transmission electron microscopy (TEM).
3. Scanning electron microscopy (SEM).

Optical/light and electron microscopy involve the use of diffraction, reflection or refraction of beam of light/electron beams interacting with the specimen, and the subsequent collection of this scattered radiation or another signal in order to create an image.

Transmission of light rays in a compound microscope

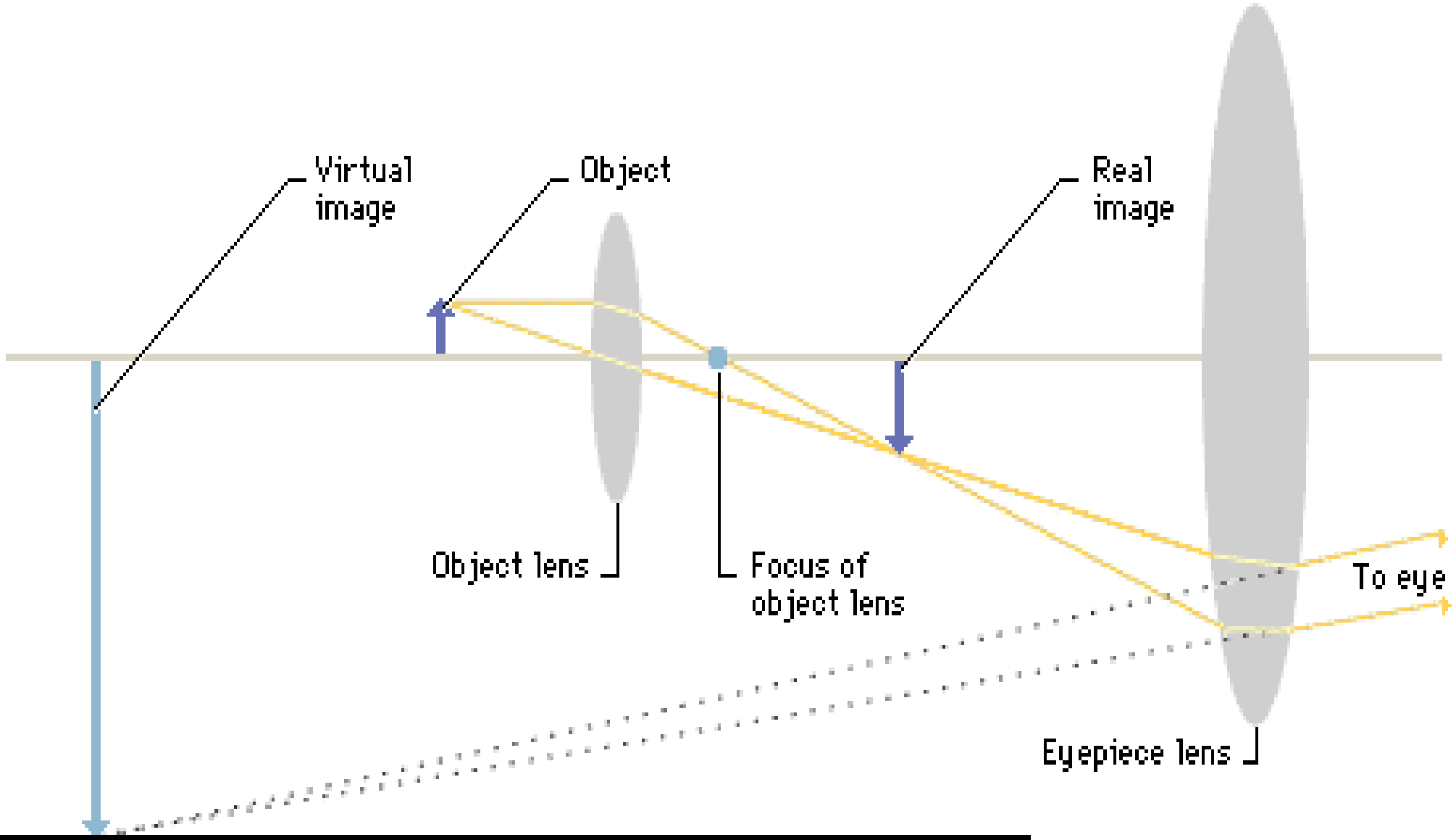

Encarta Encyclopedia, © Microsoft Corporation. All Rights Reserved.

LIGHT MICROSCOPY

These are the common light microscopy:

a. Bright-field Microscopy

b. Dark-field Microscopy

c. Phase Contrast Microscopy.

d. Fluorescence Microscopy

Light Microscopy

- Optical or light microscopy involves passing visible light transmitted through or reflected from the sample through a single or multiple lenses to allow a magnified view of the sample.
- The resulting image can be detected directly by the eye, imaged on a photographic plate or captured digitally.
- The single lens with its attachments, or the system of lenses and imaging equipment, along with the appropriate lighting equipment, sample stage and support, makes up the basic light microscope.

Bright-field Microscopy

- This is the technique of viewing small specimen using the bright-field microscope.

- Bright-field microscope is so called because it forms a **dark image** against a bright background. This microscope may consist of one eyepiece (monocular microscope) or two eyepieces (binocular microscope).

- The principle of operation of both microscopes are similar.

- An ideal microscope should be **parfocal** i.e the image should remain in focus when the objectives are changed.
- Limitations include low contrast of most biological samples and low apparent resolution due to the blur of out of focus material.
- The simplicity of the technique and the minimal sample preparation required are significant advantages.

Principle of Bright-field microscopy

- The image seen on bright-field microscope is created by the objective and ocular lenses working together.

- Light from illuminated specimen is focused by the objective lens, creating an enlarged image within the microscope.

- The ocular lens further magnifies this primary image and deliver it to the eyes through the eyepiece.

Path of light rays in a bright-field microscope

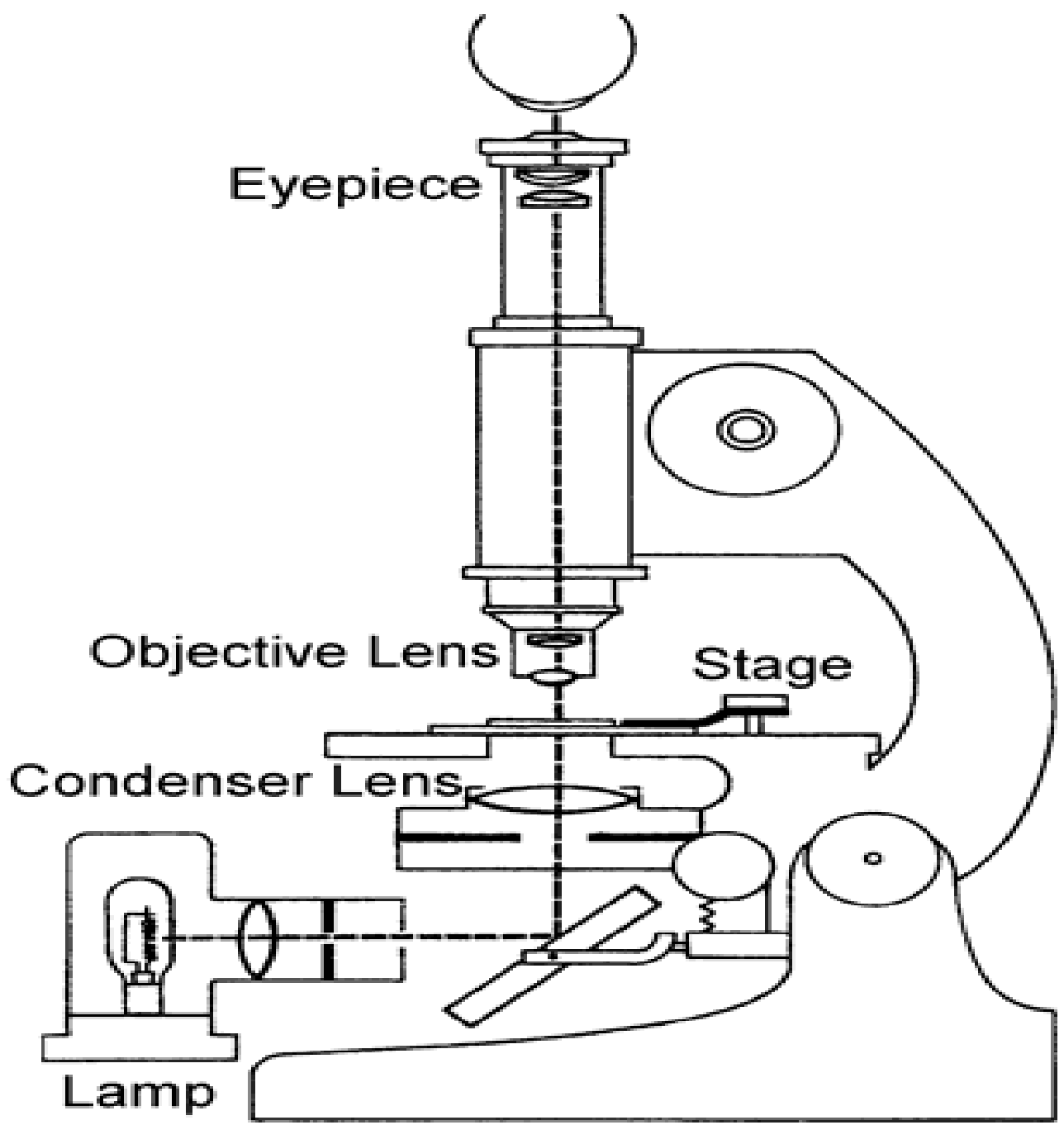

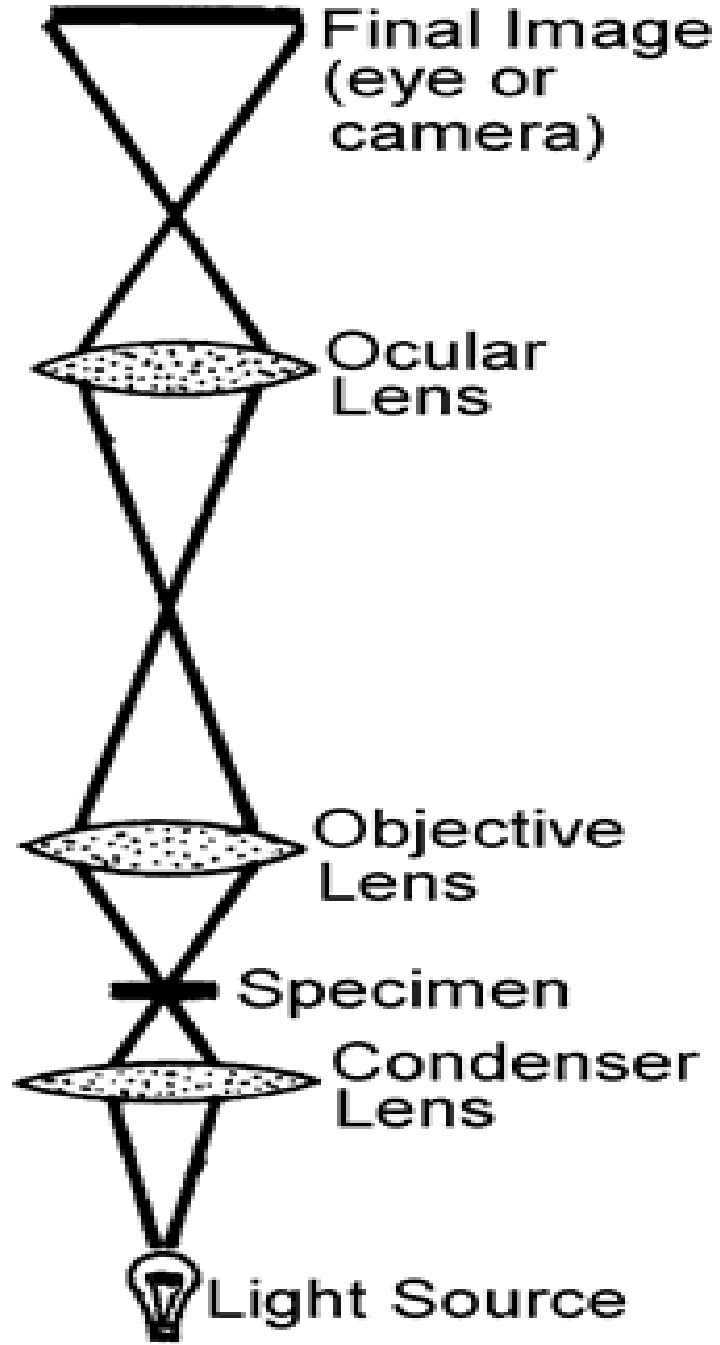

When to use bright- field microscope

- Bright field microscope is best suited to viewing stained or naturally pigmented specimens such as stained prepared slides of tissue sections or living photosynthetic organisms.
- Prepared slides, stained - bacteria (1000x), thick tissue sections (100x, 400x), thin sections with condensed chromosomes or specially stained organelles (1000x), large protists or metazoans (100x).
- Smears, stained - blood (400x, 1000x), negative stained bacteria (400x, 1000x).
- Living preparations (wet mounts, unstained) - pond water (40x, 100x, 400x), living protists or metazoans (40x, 100x, 400x occasionally), algae and other microscopic plant material (40x, 100x,

Setting up a binocular light microscope

1. Place the microscope at a convenient position on the bench. Adjust your seating so that you are comfortable operating the focus and stage control.
2. Unwind the power cable, plug in and switch on the microscope. Adjust the lamp setting to about two-thirds of its maximum.
3. Select a low-power objective (e.g X10). Ensure that the lens clicks properly.
4. Put a prepared slide (add cover slip) on the stage and use the clips on the stage to grip the slide.
5. *Adjust the eyepieces.*
6. Focus the image of the specimen using first the coarse adjustment and then the fine focusing

7. Adjust the condenser using the iris diaphragm to regulate the illumination and to eliminate scattered light rays that may blur the image.
8. For higher magnifications, swing in the relevant objective (e.g X40), carefully checking that there is space for it. Adjust the focus using fine control knob only.
9. When you have finished using the microscope, remove the last slide and clean the stage. Turn down the lamp setting to its minimum, then switch off.
10. Clean the objective and eyepiece lenses with lens tissue.
11. Unplug the microscope from the mains and wind the cable round the stand and cover with the microscope jacket.

Problems associated with the light microscopy and possible solution

1. No image; very dark image and illuminated irregularly.

solution:

- Microscope not switched on (check the plug and base)
- Illumination control at low setting or off.
- Objective nosepiece not clicked into place over a lens
- Diaphragm closed down too much or off
- Lamp failure.

2. Image visible and focused but pale and indistinct.

Solution:

- Diaphragm need to be closed down further.
- Condenser requires adjustment.

3. Image blurred and cannot be focused

Solution:

- Dirty objective
- Dirty slide
- Slide is upside-down
- Slide not completely flat on the stage
- Eyepiece lenses not set up properly for user’s

4. Dust and dirt in field of view.

Solution:

- Eyepiece lenses dirty
- Slide dirty
- Dirt on lamp glass or upper condenser lens.

JOMO

Dark field microscopy

- Dark field microscopy is a technique use to improve the contrast of unstained and transparent specimens.

- Dark-field microscope allows a viewer to observe living unstained cells and organisms by simply changing the way they are illuminated.

- It consists of a dark background and transparent specimen.

- Dark- field illumination uses a carefully aligned light source to minimize the quantity of directly-transmitted (unscattered) light entering the image plane, collecting only the light scattered by the sample.

Principle of Dark-field Microscopy

- A hollow cone of light is focused on the specimen in such a way that unreflected and unrefracted rays of light do not enter the objective.

- Only light that has been reflected or refracted by the specimen forms an image.

- The field surrounding the specimen appears black while the object or specimen itself is brightly illuminated.

- The dark-field microscope can reveal considerable internal structure in larger eukaryotes

- Dark-field can dramatically improve image contrast—especially of transparent objects – while requiring little equipment setup or sample preparation.

- However, the technique does suffer from low light intensity in final image of many biological samples, and continues to be affected by low apparent resolution.

Phase-Contrast Microscopy

- Unpigmented living cells are not clearly visible in the bright –field microscope because there is little difference in contrast between the cells and water.

- One way of solving this problem is to kill and stain cells before observation to increase contrast and create variation in colour between cell structures.

- Phase-contrast is used to view living cell in order to observe a dynamic process such as movement or phagocytosis.

- A phase-contrast microscope converts slight differences in refractive index and cell density (thickness) into easily detectable variations in light intensity and is an excellent way to observe living cells.

Principle of Phase-Contrast Microscopy

- The condenser of a phase-contrast microscope has an **annular stop**, an opaque disk with a thin transparent ring, which produces a hollow cone of light.

- As this cone passes through the cell, some light rays are bent due to variations in density and refractive index within the specimen. These light rays are retarded by about ¼ wavelength .

- The deviated rays are focused to form an image of the object.

- The undeviated rays strike **a phase ring** in the **phase plate**, a special optical disc located in the objective, while the deviated rays miss the ring and pass through the rest of the plate.

- The background formed by the undeviated light is bright, while the unstained object appears dark and well defined.

Uses of Phase-Contrast Microscope

- It is used to study microbial motility.
- Determining the shape of living cells.
- Studying eukaryotic cells.
- Detecting bacterial components such as endospores (asexual spores) and inclusion bodies (e.g poly-ß-hydrobutyrate, sulphur or other substances).

DISSECTING/STEREOSCOPIC MICROSCOPE

- This type of light microscope is used for observations at low total magnification (X4-X50)
.
- It is also used when a large working distance between objectives and stage is required, this is because the specimen is not flat or dissecting instruments are to be used.
- A stereoscopic essentially consists of two separate lens systems, one for each eye.
- The eyepiece-objective combinations are inclined at about 15degrees to each other.

- The image is resolved in three-dimension.
- The image is right side up not reversed, which is ideal for dissections.
- Specimens are often viewed in a fresh state and need not to be placed on slides, they might be in a Petri-dish or on a white tile.
- Illumination can be from above or below the specimen, as desired.
- The mechanism of operation is similar to that of binocular microscope, except that it lacks adjustable condensers or

Sample Preparation for Light Microscopy

- Specimens can be examined by simply placing them on a glass microscope slide under a glass cover slip. However, it is usually necessary to prepare and stain the samples before examination by microscopy. **Fixation is a process by which cells are preserved and stabilized.**

- Common fixatives include: acids, organic solvents, formaldehyde and glutaraldehyde.

- Thick samples, such as tissues, will need to be cut into thin sections.
- Paraffin is a common embedding medium for light microscopy as well as various plastic resins.

- **Sectioning is carried out with a microtome.**
- The microtome cuts the specimen into thin slices, or sections, of a specified thickness.
- It is also possible to collect the successive slices, called serial sections, and therefore ascertain the three dimensional aspects of the tissue or specimen being examined

ELECTRON MICROSCOPY (EM)

- The general principle of electron microscopy is analogous to light microscopy except that electrons are used to analyze the specimen instead of visible light.
- The illumination source is a white-hot tungsten filament, which emits high velocity electrons.
- The electron beam is focused by a condenser lens onto the specimen.
- The condenser lens, however, is an electromagnet instead of a glass.

- These electrons are differentially impeded by the various structures within the specimen. In other words, some of the electrons are scattered or absorbed by the atoms of the specimen.

- The electrons which pass through the specimen are focused with a series of magnetic objective lens onto either a photographic plate or a fluorescent screen.

- The electrons interact with the photographic plate or fluorescent screen as if they were

- The size of an electron microscope is dependent upon two factors.

i. Primary is the need for a good vacuum through which the electrons must pass (it takes less than 1 cm of air to completely stop an electron beam). Peripheral pumps and elaborate valves controls are needed to create the vacuum.

ii. A substantial electrical potential (voltage) is also needed to accelerate the electrons out of the source. The source is usually a tungsten filament, very much like a light bulb, but with 40-150 Killivolts of accelerating voltage applied to an anode to accelerate the electrons down the microscope column

Comparison of Microscope Optics

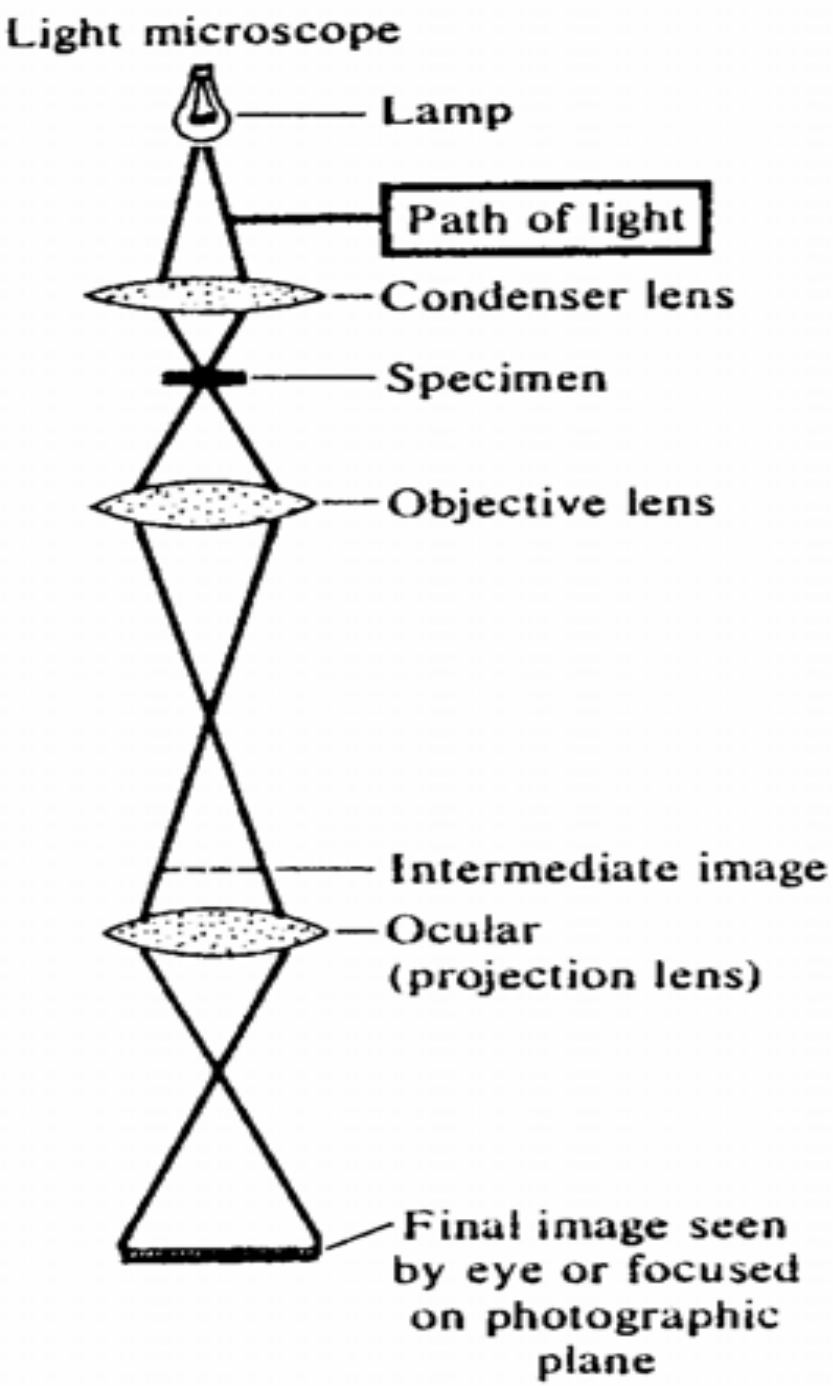

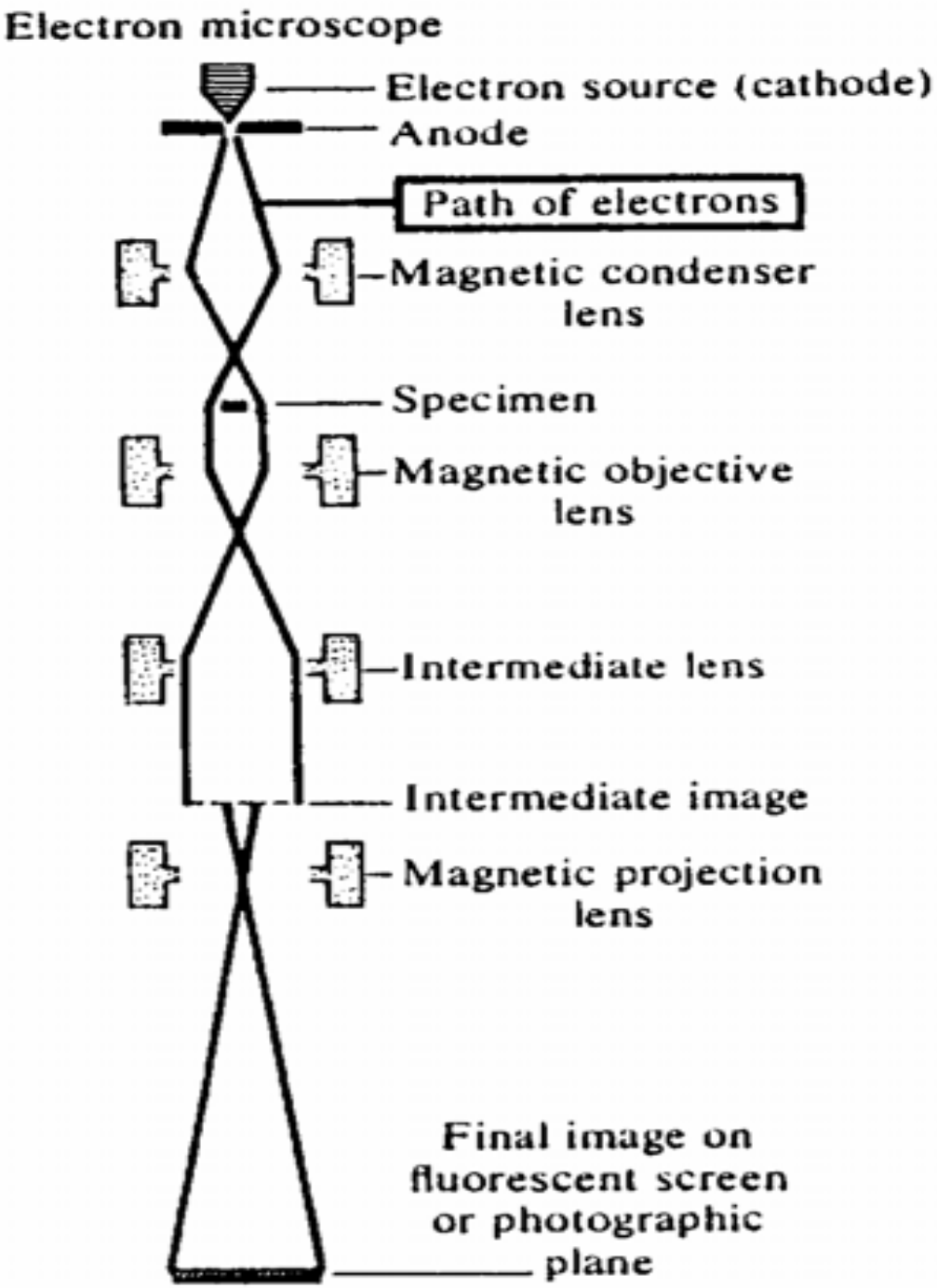

Types of EM

- The standard form of electron microscopy involves shooting an electron beam through the sample. This is called **transmission electron microscopy, often abbreviated TEM**.

- **Scanning electron microscopy (SEM) detects the electrons** that are scattered by the specimen to form a 3-dimensional image.

- The sample is fixed and coated with a thin layer of a heavy metal such as platinum to form a replica of the specimen.

- This replica is then scanned with a thin beam of electrons and the quantity of electrons scattered along each successive point of the specimen is measured by detectors which surround the sample .

- Since the amount of electron scattering depends on the angle and depth of the surface relative to the beam, the image has highlights and shadows that give it a three dimensional appearance.

- The resolution power of SEM is 30-100Å and only surface features can be examined.

- Therefore, the technique is generally used to study whole cells or tissues.

SEM

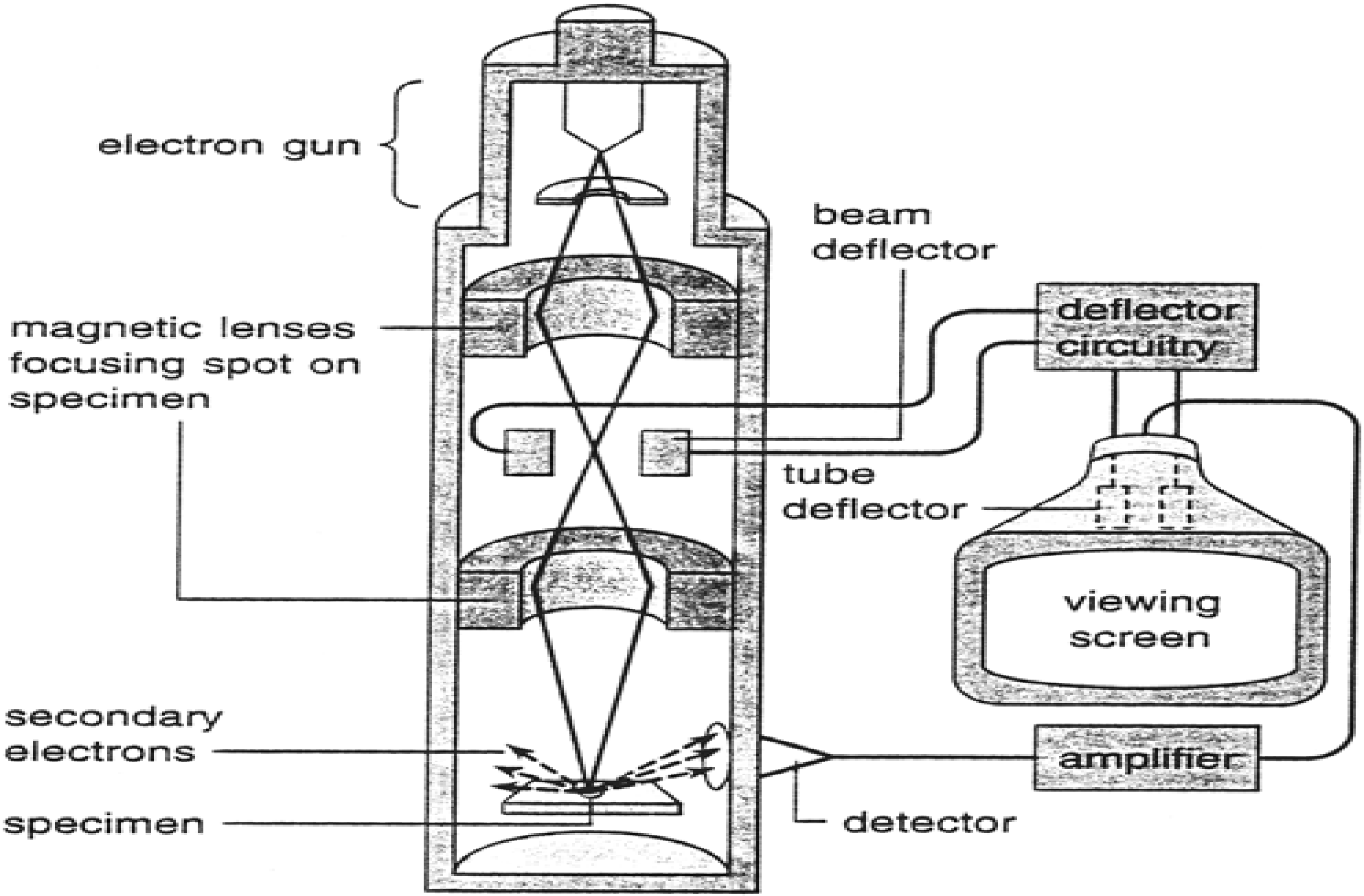
electron gun
beam deflector
deflector circuitry
magnetic lenses focusing spot on specimen
tube deflector
viewing screen
secondary electrons
amplifier
specimen
detector

Sample preparation for EM

- It is not possible to view living material with an electron microscope. Biological samples are usually fixed with glutaraldehyde.

- Since electrons have very little penetrating power, samples must be embedded in special plastic resins and cut into thin sections of 0.05-0.1μm.

- Removing all water from the specimen is necessary for the proper polymerization of the plastic resin. Following fixation the samples are dehydrated by exposing them to series of increasing alcohol concentrations until reaching 100%.

- The dehydrated sample is then put into a solution containing monomers of the embedding resin and polymerization is induced.

- This 'block' containing the sample is sectioned with the ultramicrotome and the ultrathin sections are place onto copper or nickel grids coated with a thin carbon or plastic film for support.

- Contrast in electron microscopy is dependent upon atomic number of the atoms in the sample.

- Biological materials, primarily made of carbon, exhibit low atomic number and exhibit a similar electron scattering as the carbon films on the support grid.
- To obtain more contrast, samples are stained with salts of heavy metals, such as osmium, uranium and lead.
- Staining can be carried out before the dehydration and embedding or after sectioning.
- Different cellular compartments and structures stain differently with the heavy metals.

READ UP THE DIFFERENCES BETWEEN LIGHT MICROSCOPE AND ELECTRON MICROSCOPE

PREPARATION OF MICROSCOPE SLIDES

- A microscope slide is a thin flat piece of glass, typically 75 by 25 mm (3 by 1 inches) and about 1 mm thick, used to hold objects for examination under a microscope.

- Slides are usually made of common glass and their edges are often finely ground or polished.

- Typically the object is placed or secured ("mounted") on the slide and clipped to the stage for easy viewing under the microscope.

- Coverslip is a thin, square piece of glass or plastic which is place over the specimen on the slide.

- Microscope slides are usually made of glass but sometimes plastics can also be used.

- Fused quartz slides are often used when ultraviolet transparency is important, e.g. in fluorescence microscopy.

- **Plain slides** are commonly used in biological science laboratories.

Types of Slides

- 1. A **concavity slide** has one or more shallow depressions ("wells"), designed to hold certain samples such as liquids and tissue cultures.

- 2. A **graticule slide** is marked with a grid of lines (for example, a 1 mm grid) that allows the size of objects seen under magnification to be easily estimated and provides reference areas for counting minute objects.

Mounting

- This is the process of placing a specimen on a sterile slide for microscopic examination.
- **Types of Mounting**

1. **Dry mount** - requires no water (slide, object, cover slip); usually used for inanimate objects that don't require water to live.

- Place slide on a flat surface.

- Lay specimen on top of slide (use thin specimen as possible - 1 cell layer thick is best).

- Place cover slip slowly on top of specimen as flat as possible.

2. Wet Mount: This is used for observing fresh specimens i.e specimens that require water (slide, water, object, cover slip).

- Wet mount is used to prepare slides that hold living organisms (mobile or not).

- **Procedure**

- Isolate the specimen
- Place the specimen in a small droplet of the relevant fluid (e.g fresh water, sea water, e.t.c.) on a microscope slide.
- Gently lower a coverslip onto the droplet, using forceps and avoid bubbles.

- Remove excess water on or around the coverslip with absorbent paper.
- Examine the specimen under the microscope (light microscope).
- Moving organisms can be slowed down with commercially prepared solutions, such as Protoslo.
- A few strands from a cotton ball added to the water also can help trap and slow down organisms.
- Blood smears for pathological examination are example of wet mount.

- To extend the life of a wet mount slide, scrape petroleum jelly onto each of the four edges of the cover slip (Figure 2).

- Place the cover slip over the drop of water (" jelly side down" - Figure 3), and press *lightly* to seal it to the slide. This sealed slide may last for several days.

3. Temporary Mount

- This is involved mounting fresh specimens in a mountant with a short useful life e.g for identification purposes.

- It is desirable to clear the specimen first and a dual purpose substance such as lactophenol, which will clear from 70% (v/v) ethanol is recommended.

4. Permanent Mount:

- This is used to protect sections during examination and allow storage without deterioration.
- It involves sealing your section under a coverslip in a mountant. The mountants used are clear resins dissolved in a slowly evaporating solvent.
- A good mountant has a good refractive index to the tissue being mounted, remains clear through time, is chemically inert and will harden quickly.
- Examples of mountants include natural resins like Canada balsam (take a long time to dry) and plastic like DPX mountant (dry quickly and do not yellow with age).
- For tissue components soluble in organic solvents, aqueous mounting media such as gelatin or glycerol

Procedure for mounting section on a slide

- Apply a little mountant to a coverslip of appropriate size.
- Turn the coverslip over and place the edge on one side of the section.
- Lower the coverslip slowly down onto the sections so as to displace all the air and sandwich the sections between the slide and the coverslip.
- Press firmly from the centre outwards to distribute the mounting medium evenly.
- Allow the solvent to evaporate. Best results come from slow drying when the time allows, but many synthetic mountants will tolerate brief heating when speed is essential.

Importance of Cover slip

- With a cover slip in place, the drop is flattened out allowing the investigator to focus with high power very close to the specimen.

- The cover slip also confines the specimen to a single plane and thereby reduces the amount of focusing necessary.

- Finally, the cover glass protects the objective lens from immersion into the water drop.

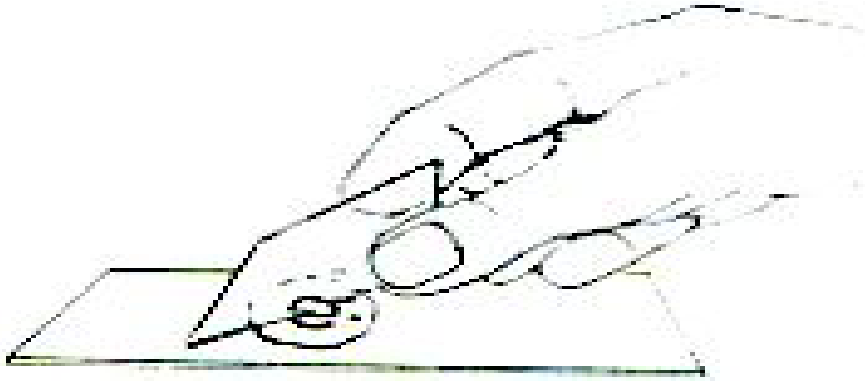

Figure 1

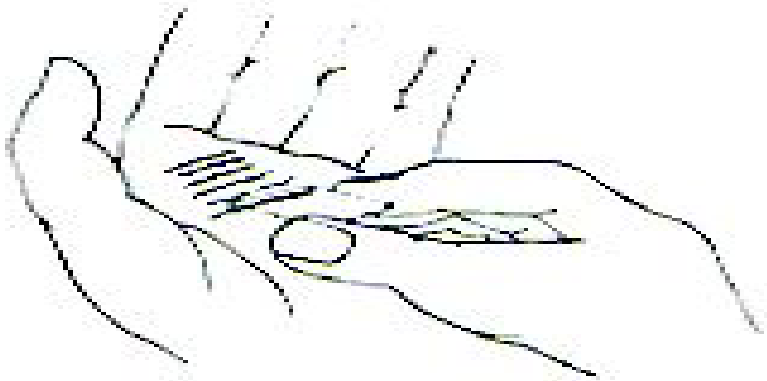

Figure 2

Figure 3

Squash Preparation

- These may be required for any type of mount.
- The smallest specimens can be squashed after mounting by applying gentle pressure on the coverslip with your forceps.
- Large specimens can be squashed between two slides before fixing and mounting. This ensures that higher pressure is applied.